Polling Place Accessibility Guidelines

April 2014

Debra Bowen, Secretary of State

Polling Place Accessibility Guidelines

Table of Contents

Overview of Polling Place Accessibility Requirements 2
1. Introduction 2
2. Enforcement 3
3. Implementation by County Elections Officials 3
4. Communications 3
5. On-Site Inspections of Polling Places 4
6. Polling Place Physical Accessibility Requirements 5
7. Temporary Modifications of Polling Places 6
8. Inaccessible Polling Places 7
9. Early Voting 7
10. Sample Ballot Accessibility Designations 7
11. Polling Place Records 7
12. Voting Accessibility Advisory Committee (VAAC) 7
a. Composition of the VAAC 8
b. Functions of the VAAC may include: 8
13. General Concepts of Physical Accessibility 9
Polling Place Accessibility Requirements 10
1. Parking Area 10
2. Path of Travel to the Polling Place 14
3. Doorways, Hallways and Entrances 17
4. The Voting Area 20
5. Signage 24
6. Ramps, Curb-Ramps and Slopes 27
Ramps 27
Curb-Ramps 29
7. Elevators and Lifts 31
Elevators 31
Lifts 35
8. Restrooms 37

Overview of Polling Place Accessibility Requirements

1. Introduction

This document provides guidance to help understand the federal and state requirements for physically accessible polling places. However, this technical assistance does not constitute a legal interpretation of the statutes, regulations or other standards relating to physical access.

The Federal "Voting Accessibility for the Elderly and Handicapped Act", 42 USC Section 1973ee *et seq*. (The Act) was signed into law on September 28, 1984, and can be found in Appendix A. The purpose of the law is to ensure polling place access for elderly voters and voters with disabilities.

The Act uses the term “handicapped” to refer to persons with disabilities. To be consistent throughout these Guidelines and avoid any ambiguity, the term “voters with disabilities” is used rather than the term “handicapped.”

Section 1973ee-1(a) of the Act requires all polling places for federal elections to be accessible to elderly voters and voters with disabilities.

Section 1973ee-6(1) of the Act requires “accessibility” to be defined in Guidelines promulgated by the Secretary of State.

Elections Code (EC) Section 12280 states, “When designating polling places, the elections official shall undertake necessary measures in the locating of polling places to ensure that polling places meet the guidelines promulgated by the Secretary of State for accessibility by the physically handicapped.”

California regulations provide a comprehensive set of requirements covering important areas of accessibility for persons with physical and sensory disabilities. California’s physical access regulations are contained in the California Building Code, which is found in Title 24 of the California Code of Regulations, Part 2, Volume 1, Chapter 11.

Please Note: Although these Guidelines contain the most current laws and regulations available at the time of publication, laws and regulations change. Before making a decision that may impact physical accessibility to polling places, county elections officials may view the relevant Sections of the most recent version of the California Building Code accessibility regulations at the Building Standards Commission's website http://www.bsc.ca.gov/codes.aspx.

In addition, where this document uses the term “shall” that term means the action is required and where the document uses the term “may” that term means the action is optional, but recommended.

This update to the Guidelines and the Polling Place Accessibility Checklist reflects recent changes in the California Building Code. It is not intended to create non-compliance or determine inaccessibility of polling places that were previously considered accessible under the previous Guidelines.

The Secretary of State recommends that polling places considered not accessible under the previous Guidelines be resurveyed using the updated Polling Place Accessibility Checklist to determine whether facility upgrades or new standards in the Guidelines may increase accessibility of those locations.

2. Enforcement

The Act allows the United States Attorney General or any individual who is “personally aggrieved by the non-compliance” with accessibility requirements to bring an action for declaratory or injunctive relief in the appropriate district court (The Act, 42 USC Section 1973ee-4(a).)

3. Implementation by County Elections Officials

It is the intent of the Secretary of State in promulgating these Guidelines that accessibility requirements are implemented and monitored primarily at the local level. Essential to this intent is the recommendation that each county elections official appoint and maintain a Voting Accessibility Advisory Committee (VAAC) to advise and assist the elections official in ensuring that the provisions of the Act are implemented.

Additionally, county elections officials may wish to refer to the Secretary of State’s ‘Top-to-Bottom Review of Voting Systems’ findings for information about setting up voting booths and voting equipment to ensure accessibility for voters with disabilities.

4. Communications

To assist counties in communicating voter registration and related information to elderly voters and voters with disabilities, the Secretary of State will maintain and advertise a 24-hour, toll-free “text telephone" TTY number, which is (800) 833-8683.

Any county elections official that does not advertise the toll free number may wish to consider installing, maintaining, and advertising its own TTY number. This may also be met if a TTY is located in another office of county government, as long as the level of service is the same. Each county may wish to consider listing its TTY number and/or

the Secretary of State's TTY voter registration and information number in every local telephone directory in which the elections office's public number is listed.

Voters can also access election information through the Secretary of State's toll-free voter hotline at (800) 345-VOTE (8683). Deaf and hard-of-hearing voters may call the toll-free voice line by dialing 711 for text relay service or by calling their preferred video relay service provider.

Election information is also available on the Secretary of State's website at www.sos.ca.gov/elections.

5. On-Site Inspections of Polling Places

When designating polling places, the elections official shall undertake necessary measures in the locating of polling places to ensure that polling places meet the Guidelines promulgated by the Secretary of State for accessibility by the physically handicapped (EC Section 12280). Such measures include conducting an on-site inspection of each of its polling places, including a survey of the accessibility of each site using a Polling Place Accessibility Checklist (PPAC) provided by the Secretary of State and found in Appendix B or a checklist in substantially the same form provided by the Secretary of State. It is recommended that records of each polling place on-site inspection be kept on file and available for public inspection.

Each county elections official may identify and maintain records on more than one polling place in a voting precinct:

(a) Where an accessible polling place is identified within a precinct, any remaining potential polling places need not be inspected or surveyed until scheduled for use (The Act, 42 USC Section 1973ee-1 (a).) However, counties are encouraged to give a preference to accessible polling places that provide public transportation.

(b) Where a polling place does not meet the requirements of the Guidelines, the county elections official shall make every reasonable effort to identify and survey other potential sites until either an accessible site is located, or until it is established that no accessible site of comparable utility as a polling place exists within the voting precinct (The Act, 42 USC Section 1973ee-1 (a).) It is recommended that documents illustrating county elections official's efforts to seek alternative polling sites be kept on file and available for public inspection.

(c) Where no accessible polling place is identified within the voting precinct, county elections officials are permitted to employ temporary modifications or measures

for the polling place used on Election Day to attempt to provide an acceptable polling place within the precinct (The Act, 42 USC Section 1973ee-1 (b)(2)(A).)

6. Polling Place Physical Accessibility Requirements

The Guidelines prepared by the Secretary of State are designed to meet the requirements of The Act as well as comply with state elections laws. These Guidelines rely upon state architectural and construction standards. Unless otherwise specified, all citations refer to the California Code of Regulations, Title 24, Part 2, of the California Building Code, as published in the Access Compliance Reference Manual prepared by the Division of the State Architect, Department of General Services.

Illustrations are taken from the February 2004 Americans with Disabilities Act (ADA) Checklist for Polling Places, prepared by the United States Department of Justice and from other sources. Relevant Sections of the California Building Code, Title 24 can be found in Appendix C. The inclusion of the relevant Sections does not constitute additional accessibility requirements above those contained in the Guidelines.

It is intended that these Guidelines promote the goal of full access to polling places for elderly voters and voters with disabilities.

A PPAC is provided for use by county elections officials to determine if polling places meet the minimum accessibility standards established by these Guidelines as provided for in the California Code of Regulations, Title 24, Part 2, of the California Building Code and other relevant laws and regulations.

Minimum standards for accessible polling places include requirements for:

1. Parking Areas
2. Paths of Travel to the Polling Place
3. Doorways, Hallways and Entrances
4. Voting Areas
5. Signage
6. Ramps, Curb-Ramps and Slopes
7. Elevators and Lifts
8. Restrooms (if they are made available to voters on Election Day)

Nothing in these Guidelines shall prevent a county elections official from enacting additional programs, procedures, or features to promote greater accessibility than the minimum standards provided in the Guidelines.

7. Temporary Modifications of Polling Places

All polling places shall meet the accessibility requirements of the Guidelines except as outlined in this Section.

When a polling place is determined to be inaccessible as a result of an on-site inspection, the county elections official shall make a reasonable effort to relocate the polling place to a site within the voting precinct that is accessible. In some cases, a polling place, while determined not to be fully accessible following an on-site inspection, may still be made accessible to elderly voters and voters with disabilities through the use of temporary modifications. When an accessible polling place cannot be located, county elections officials are permitted to attempt to modify the polling site for use on Election Day by using equipment, devices, or measures designed for temporary access. Possible Modification Techniques can be found in Appendix D.

The county elections official may attempt to modify a polling place by applying temporary measures to provide accessible features or to minimize physical barriers at any polling place. Equipment or measures used to modify areas of a polling place may be placed at arrival points, on the paths of travel throughout the polling place, at entryways, or within a voting area.

County elections officials may wish to consider having the equipment provided at polling places on Election Day evaluated by the local VAAC to determine whether it is appropriate for its intended purpose. The county elections official may also wish to consult with their County ADA Coordinator or local building officials for assistance in determining whether temporary modifications or measures are appropriate for use on Election Day to make the polling place as accessible as possible.

When it is determined that a polling place is not accessible or may not be modified to make it accessible on a temporary basis, the county officials may:

(a) Designate the polling place as inaccessible and so indicate on the appropriate sample ballot, or;
(b) Request the local VAAC review the results of the PPAC and make a recommendation on the advisability of using the polling place when the county has determined that other fully accessible or more accessible places are not available.

This review by the local VAAC may include consideration of temporary modifications taken to make the polling place as accessible as possible.

8. Inaccessible Polling Places

Although all available polling places in a voting precinct may be determined to be inaccessible, it is intended that all polling places be made as accessible as possible. Therefore, the county elections official shall, to the extent practicable, take the necessary steps (including the use of temporary modifying equipment or measures) to minimize physical barriers at each location used as a polling place (28 CFR Part D 35.150(b)(1).)

9. Early Voting

Elections Code Section 3018(b) authorizes “early voting” procedures to allow voters to cast ballots at locations designated as “satellite” election offices. Early voting polling places shall also be accessible or modified with temporary modifying equipment or measures according to the standards set forth in these guidelines.

10. Sample Ballot Accessibility Designations

Polling places found to be accessible based on the results of the PPAC may also be designated as accessible on sample ballots mailed to voters in the voting precincts. (EC Section 13304).

Polling places determined to be inaccessible, but determined to be modified to be accessible may be designated as accessible on sample ballots mailed to voters in the polling precinct (EC Section 13304).

Polling places that are not accessible or cannot be modified to be made temporarily accessible, may be designated as inaccessible on the sample ballots mailed to voters in the polling precinct (EC Section 13304).

11. Polling Place Records

Each county elections official may wish to maintain a record, which contains substantially the same information as the Secretary of State’s PPAC, of the accessibility of polling places in each voting precinct.

12. Voting Accessibility Advisory Committee (VAAC)

It is the intention of the Secretary of State in promulgating these Guidelines that accessibility requirements are implemented and monitored primarily at the local level.

Essential to this intent is the recommendation that each county elections official establish a VAAC.

a. Composition of the VAAC

County elections officials are encouraged to consider the following suggestions when establishing their VAAC to ensure adequate representation and input from people with disabilities, organizations of elderly people, and people with experience or background in architectural accessibility:

(a) Committees in counties with less than 50,000 registered voters have a minimum of three members.
(b) Committees in counties with 50,000 to 500,000 registered voters have a minimum of five members.
(c) Committees in counties with 500,000 to 1,000,000 registered voters have a minimum of seven members.
(d) Committees in counties with more than 1,000,000 registered voters have a minimum of nine members. Existing county boards or committees which meet the representational guidelines of (a), (b), (c) or (d) above, as appropriate, may assume the functions of the VAAC.

b. Functions of the VAAC may include:

(a) Assisting and advising county elections officials in outreach programs to organizations of elderly individuals and people with disabilities.
(b) Advising county elections officials on the placement of voting equipment, recognition of barriers to participation by elderly voters and voters with disabilities, and mechanisms to eliminate or mitigate the impact of these barriers to accessibility.
(c) Assisting county elections officials in surveying polling place accessibility in compliance with these guidelines.
(d) Evaluating an inaccessible polling place or voting area to:
    (i) Determine that an inaccessible polling place, with the use of temporary modifying equipment or measures, can be modified to permit its use by elderly voters and voters with disabilities.
    (ii) Determine that the polling place is not accessible, and cannot be modified, regardless of the application of temporary equipment or measures.
(e) Assisting and advising county elections officials in training of precinct workers relative to accessibility for elderly voters and voters with disabilities.
(f) Assisting in the recruitment of elderly voters and voters with disabilities to be precinct workers.
(g) Undertaking other activities relative to accessibility of the voting process.

13. General Concepts of Physical Accessibility

The following eight Sections are general concepts of physical accessibility for polling places. Although these concepts are not all inclusive, these Guidelines and the Polling Place Accessibility Checklist provide the technical details necessary to determine accessibility. Photographs and figures are for illustration only and do not constitute additional requirements of the Guidelines. The citations in the concepts that follow are from the California Building Code, California Code of Regulations (CCR), Title 24, Part 2, Volume 1, Chapter 11. The relevant Sections of the building code can be found in Appendix C for your reference. The inclusion of the relevant Sections does not constitute additional accessibility requirements above those contained in the Guidelines.

In addition to general concepts of physical accessibility, county elections officials may wish to consider additional measures to accommodate elderly voters and voters with disabilities on Election Day. Possible accommodations on Election Day can be found in Appendix E.

Polling Place Accessibility Requirements

1. Parking Area
Sections 11B-208, 11B-302, and 11B-502

If there is a parking lot at the polling place, it shall provide accessible parking. The number of accessible spaces shall be provided according to Table 1 below. (CCR, 11B-208.2.)

Table 1
Minimum number of accessible spaces required.

Total Number of Parking Spaces in Lot or Garage	Minimum Required Number of Spaces
1-25	1
26-50	2
51-75	3
76-100	4
101-150	5
151-200	6
201-300	7
301-400	8
401-500	9
501-1,000	Two Percent of Total
1,001 and over	20, plus 1 for each 100, or fraction thereof over 1001

To use Table 1, count the total number of parking spaces in the parking lot or garage. If the total number of spaces is from 1 to 25, look in the right column to find that at least one of those 25 spaces must be an accessible space. If the total number of parking spaces is 520, multiply the 520 by 2 percent to determine that 10.4 accessible spaces are required. Round the 10.4 up to the next whole number to find that 11 is the correct number of accessible spaces required for that parking lot.

If off-street parking spaces are available at the polling place, at least one van-accessible parking space shall be designated for use by people with disabilities. For every 6 accessible spaces, there shall be 1 van accessible space. (CCR, Section 11B-208.2.4.) (See Table 2 below.)

The van accessible space shall be a minimum of 18 feet deep outlined to provide 9 feet for parking and 8 feet for loading and unloading. (CCR, Section 11B-502.) Van accessible spaces shall have the access aisle on the passenger side of the parking space. (CCR, Section 11B-502.3.4.)

Table 2
Required number of van accessible spaces.

Number of Accessible Spaces in Lot or Garage	Minimum Required Van Accessible Spaces
1 to 6	1
7 to 12	2
13 to 18	3
19 to 24	4
25 to 30	5

Additional auto accessible spaces, if required by the Polling Place Accessibility Checklist (PPAC), shall be a minimum of 14 feet wide and outlined to provide 9 feet for parking and 5 feet for loading and unloading. Access aisles may be located on either side of auto accessible spaces. (CCR, Sections 11B-502.2, 11B-502.3, and 11B-502.3.4, Exception.) See Figure 1 below. The accessible parking spaces and loading/unloading areas shall not exceed 2 percent slope in any direction. (CCR, Section 11B-502.4, Exception.)

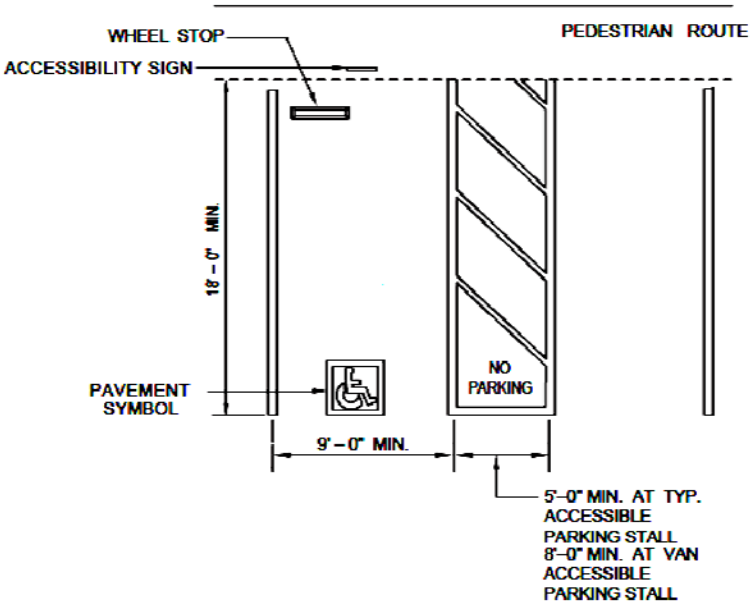

Figure 1. An accessible parking stall.

The distance from the designated accessible parking area shall be on the shortest accessible route to an accessible entrance. (CCR, Section 11B-208.3.1.) The shorter the distance to the voting area, the easier it is for voters with heart and lung conditions or other mobility disabilities to vote on Election Day. To provide an accessible path of travel that is also a safe path of travel, the accessible parking spaces shall be arranged so a voter using an accessible space is not required to travel behind any vehicle other than their own. (CCR, Section 11B-502.7.1.) The requirement for a stable, firm, and

slip-resistant path of travel found in Section 2 Path of Travel shall also apply to the accessible parking space and access aisle surfaces. (CCR, Sections 11B-302.1, and 11B-502.4.)

Every accessible parking space shall be clearly marked by a sign having the required International Symbol of Accessibility (ISA). The words “Van Accessible” or an additional sign with the words “Van Accessible” shall be added underneath the ISA if the space is intended to be van accessible. Accessible parking signage shall be mounted on a pole or wall at the front of the space at a minimum of 60 inches above the finish floor or ground surface measured to the bottom of the lowest sign. Signs located within an accessible route shall be a minimum of 80 inches above the finish floor or ground surface measured to the bottom of the lowest sign. (CCR, Section 11B-502.6 and Exception.) See Figure 2.

Figure 2. Blue and white signs for van accessible parking and the international symbol of accessibility. The signs are connected to a metal pole.

At polling places where parking is provided in a parking structure, all vehicular entrances to and vertical clearances within the parking structure that lead to the accessible parking spaces shall have a minimum vertical clearance of 8 feet 2 inches . This height is required to ensure a safe vehicular path of travel to the accessible parking spaces. (CCR, Section 11B-502.5.)

Drop-off zones may be provided at some polling places. These drop-off zones shall provide a level vehicular pull-up space 8 feet wide minimum by 20 feet long minimum. (CCR, Section 11B-503.2.) Drop-off zones shall provide an access aisle minimum 60 inches wide and shall extend the full length of the vehicular pull up space they serve. (CCR, Sections 11B-503.3.1 and 11B-503.3.2.) Access aisles shall be marked with a painted borderline around their perimeter. The area within the borderlines shall be marked with hatched lines in a color contrasting with that of the aisle surface and shall not overlap the vehicular way. (CCR, Section 11B-503.3.3.) Access aisle surfaces shall be level, stable, firm, and slip-resistant. (CCR, Section 11B-503.4) See Figure 3. Drop-off zones constructed prior to January 1, 2014, may have access aisles measuring 60 inches wide by 20 feet long without markings.

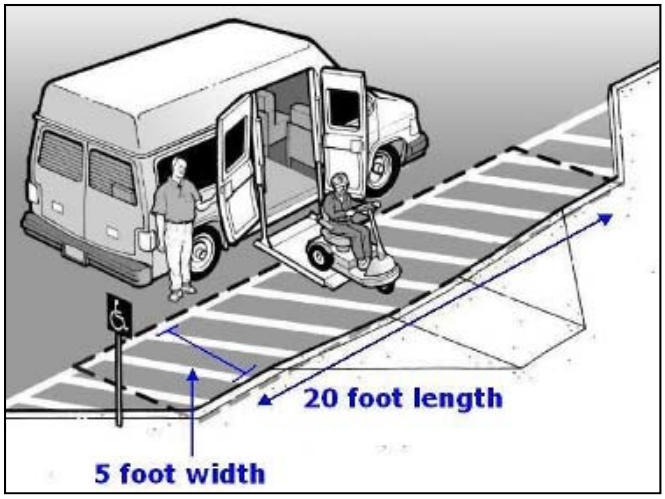

Figure 3. Drop-off zone for passengers.

When necessary, temporary modifying equipment or measures may be used to provide compliance at accessible parking spaces and passenger drop-off zones.

2. Path of Travel to the Polling Place
Sections 11B-201, 11B-206, 11B-216, 11B-302, 11B-307, and 11B-403

Where there is more than one point of entry or exit to a building where the voting area is located, these guidelines apply to at least one path of travel from each of the following arrival points: accessible parking, accessible drop-off zones, public transportation, and public streets and sidewalks. When accessible drop-off zones or public transportation points are beyond the polling place property line, it is recommended that the path of travel to the voting area be measured to include a path of travel beyond the property line in an effort to include drop-off zones or public transportation loading and unloading zones. At least one accessible path of travel from the property line to the voting area shall be provided on Election Day. (CCR, Section 11B-206.2.1.) See Figure 4 below.

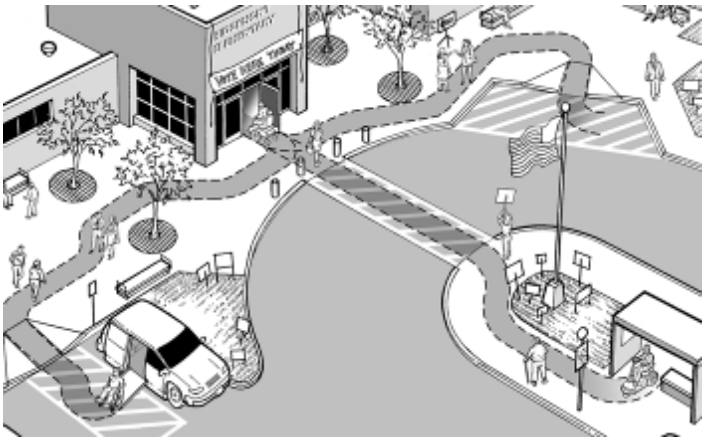

Figure 4. Multiple paths of travel from accessible locations to the polling place.

Sidewalks or other walkways shall be at least 48 inches wide. An exception to the 48 inches clear width is allowed when, due to right-of-way restrictions, natural barriers or other existing conditions, the enforcing agency determines that compliance with the 48-inch clear sidewalk width would create an unreasonable hardship. Only in these cases may the clear width narrow to 36 inches wide. (CCR, Section 11B-403.5.1.3.)

When sidewalks slope to the side, the maximum cross-slope (the slope that is perpendicular to the direction of travel) allowable is 2 percent. (CCR, Section 11B-403.3.) A 2 percent slope, (the technical definition of "level") is ¼ inch of height for each 12 inches of distance. A limit to the sideways slope of the sidewalk is important to voters with balance disabilities or voters using walkers or canes.

Exterior accessible paths of travel to the polling place shall be free of steps. Abrupt changes in level from ¼ inch to ½ inch shall be beveled. (CCR, Sections 11B-403.4 and 11B-303.3.) Any changes in height on the path of travel of ½-inch or more shall

have a sloping surface that complies with the requirements in Section 6 Ramps, Curb Ramps, and Slopes.

Path of travel surfaces shall be stable, firm, and slip-resistant. (CCR, Section 11B-302.1.) For example, sand, gravel, broken cement/asphalt, or wet slippery surfaces may not be accessible.

When there are grates or other gaps in the walking sidewalk surface, they shall not be more than ½ inch wide in the direction of travel. (CCR, Section 11B-302.3.) Pedestrian routes intended for voters shall have a vertical clear space at least 80 inches high from the ground or floor. Tree limbs, signs, or other objects placed in the path of travel shall be at least 80 inches above the surface of the ground or floor. When the vertical clear space next to the accessible path of travel is reduced to less than 80 inches, a barrier to warn blind or visually impaired persons shall be provided. (CCR, Section 11B-307.4.)

Pedestrian paths shall be free of objects that project horizontally into the path of travel. When objects such as tree limbs or signs are located at a height between 27 inches and 80 inches above the surface of the ground or floor, they shall not extend into the accessible path of travel more than 4 inches. (CCR 11B-307.2.) However, each handrail is permitted to protrude a maximum of 4 ½ inches. (CCR, Section 11B-307.2. Exception.) Pole mounted objects between 27 inches and 80 inches above the walking surface can extend into the path of travel up to 12 inches. (CCR, Section 11B-307.3.) See Figure 5.

Objects that extend horizontally into the accessible path of travel shall not reduce the path of travel to less than required by this Section. (CCR, Section 11B-307.5.)

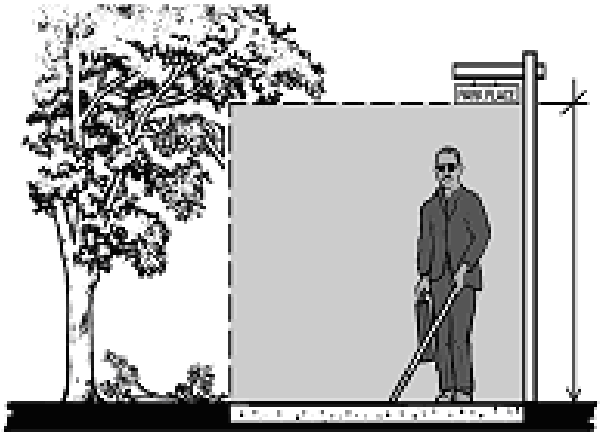

Figure 5. Man using a walking cane to travel under an 80" high obstruction.

Occasionally there is more than one path of travel to the polling place but only one is accessible. Signs that meet the requirements of Section 5 of these Guidelines shall be used to direct elderly voters and voters with disabilities to the accessible path of travel. (CCR, Section 11B-216.6.) See Figure 6.

Figure 6. ISA signs directing individuals to the accessible path of travel to a polling place.

When necessary, temporary modifying equipment or measures may be used to provide compliance along the exterior path of travel.

3. Doorways, Hallways and Entrances
Sections 11B-206.4, 11B-403, and 11B-404

Doorways, hallways, and entrances into the voting area shall be connected by an accessible path of travel from public transportation stops, from accessible parking and passenger loading zones, and from public streets and sidewalks if these paths of travel are provided. (CCR, Section 11B-206.4.)

The maximum effort to pull or push open a door shall not exceed five pounds of force so that voters with disabilities and elderly voters will be able to enter the voting area. (CCR, Section 11B-404.2.9.) All doors on the accessible path of travel shall have a clear width of at least 32 inches. (CCR, Section 11B-404.2.3.)

The “strike-side” or “strike-edge” of the door is located at the edge of the door opposite the hinges. The strike-side requires a clear space on the pull side of the door that extends 18 inches beyond the edge of the door for interior doors, and 24 inches for exterior doors. Some doors have an automatic closing device. If a door has an automatic closer and the door hardware latches shut, the push side of the door requires a clear space that extends 12 inches beyond the edge of the door. (CCR, Sections 11B-404.2.4.1 and 11B-404.3.) See Figure 7.

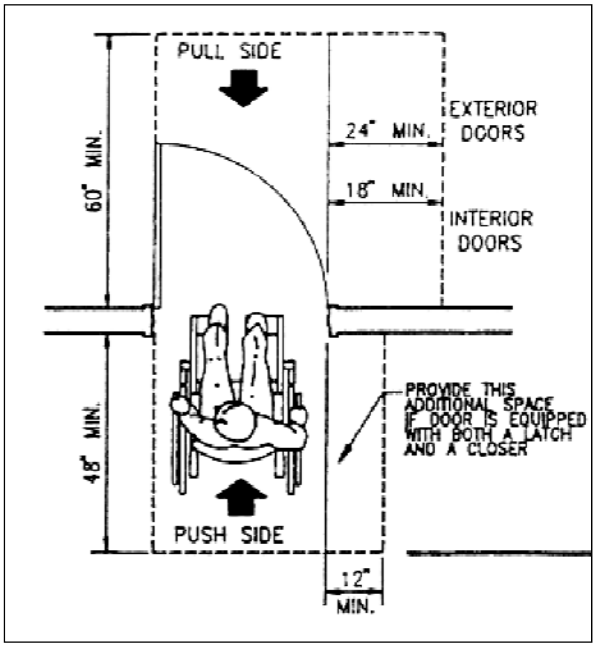

Figure 7. Person using a wheelchair at a doorway illustrating doorway clear space for push side and pull side front approaches.

Entrances require level landings on each side of the door to allow a voter to open and maneuver around a door. All doors shall have a 60-inch landing perpendicular to the door on the pull-side of the door. On the push side, there shall be a 48-inch landing perpendicular to the door. (CCR, Section 11B-404.2.4.1.) All doors shall have a

smooth, uninterrupted surface that is minimum 10 inches high measured from the floor on the push side to allow the door to be opened by a wheelchair footrest without creating a trap or hazardous condition. (CCR, Section 11B-404.2.10.)

The threshold at the bottom of a doorway may not exceed ½ inch in height. Any vertical surface at the threshold ¼ inch to ½ inch high shall be beveled. (CCR, Section 11B-404.2.5.)

Hand-activated door opening hardware, such as handles, pulls, latches, locks, and other operating devices shall be easy to operate with one hand without tight grasping, pinching or twisting of the wrist. The operable part of the door hardware shall be placed between 34 inches and 44 inches above the finish floor. Latching and locking doors that are hand-activated and are located on a path of travel shall be operable with a single effort by lever-type hardware, panic bars, push-pull activating bars or other similar hardware. (CCR, Section 11B-404.2.7.) See Figure 8.

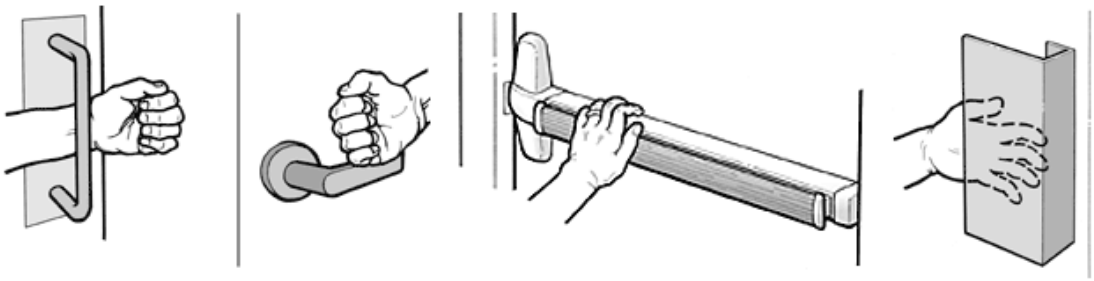

Figure 8. Hand-activated door opening hardware including handles, pulls, and latches.

Hallway and corridor width requirements depend on the number of people using the area. When 10 or more people use hallways or corridors in buildings such as businesses, churches, or schools, the required width of the hallway/corridor is 44 inches wide. (CCR, Section 11B-403.5.1 Exception 2.) Corridors and hallways serving an occupant load of less than 10 shall not be less than 36 inches wide. (CCR, Section 11B-403.5.1.)

When hallways exceed 200 feet in length, there shall be passing spaces 60 inches by 60 inches, at intervals no more than 200 feet apart. A “T” intersection of two corridors or walks is an acceptable passing place. (CCR, Section 11B-403.5.3.) See Figure 9.

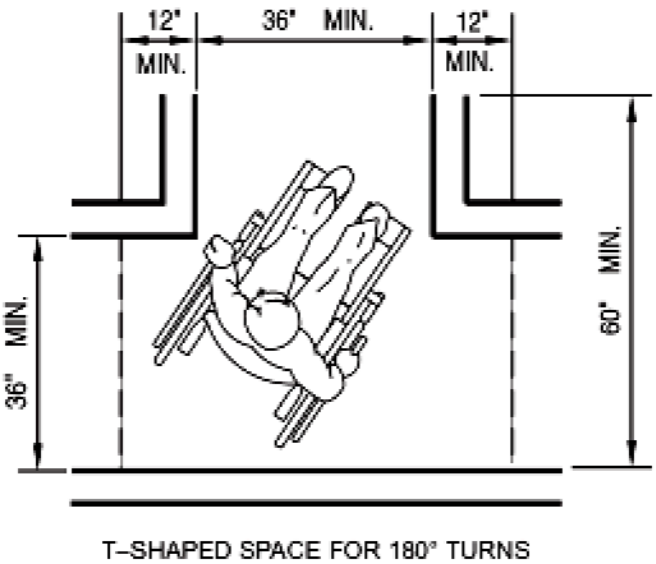

Figure 9. Person using a wheelchair within a "T" intersection with measurements.

Other requirements for the interior path of travel may include the slope, cross-slope, overhead clear space, protruding objects, changes in level, and stable, firm, and slip-resistant surfaces, or other path of travel features as explained in Section 2 Path of Travel.

4. The Voting Area
Sections 11B-206,11B-216, 11B-302, 11B-303, 11B-305, 11B-307, and 11B-308

At least one accessible route shall connect accessible building or facility entrances with all accessible spaces and elements within the building or facility Therefore, elements in the voting area such as seats, tables, voting equipment, emergency exits, or similar elements, shall be located along accessible aisles that lead to an exit. (CCR, Section 11B-206.2.4.) See Figure 10.

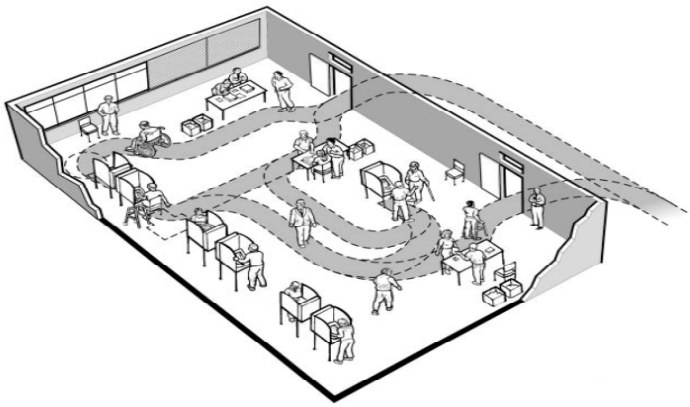

Figure 10. Paths of travel within a polling place voting area.

When voters enter the voting area, a stable, firm, and slip-resistant path of travel shall be provided. (CCR, Section 11B-302.1.) For that reason hardwood or waxed floors that are not slip-resistant, deep pile carpet, loose carpets, or throw rugs are not recommended. For example, polished hardwood or waxed floors can become a slipping hazard, while deep pile carpet can be difficult for a person using a wheelchair to wheel across. Loose carpets or throw rugs can cause a tripping hazard.

Every aisle shall not be less than 36 inches wide if there are booths or tables for voter use on only one side, and not less than 44 inches wide if serving both sides of the aisle. (CCR, Section 11B-403.5.1, Exception 4.) See Figure 11.

Figure 11. Width of aisles in voting areas.

In the event of an emergency, locked exit doors shall have accessible hardware so voters and poll workers may have an additional way to exit the building. (CCR, Sections 11B-309.4 and 11B-404.2.7.)

The voting area shall also be free of objects that protrude into the path of travel, such as lighting, shelves, or wall mounted telephones. When objects mounted on walls are placed at a height between 27 inches and 80 inches above the floor, they shall not extend into the path of travel more than 4 inches. (CCR, Section 11B-307.2.)

The 4-inch limitation provides a measure of safety when voters with limited vision are using the accessible path of travel. See Figure 12 for an example of an item protruding 4 inches into the path of travel.

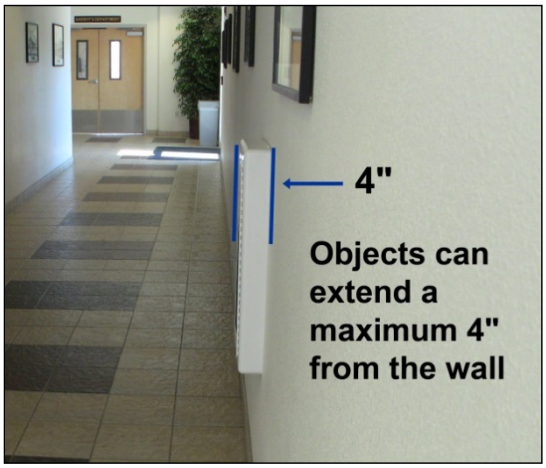

Figure 12. Object protruding 4 inches into the path of travel between 27 inches and 80 inches high.

Pole mounted objects between 27 inches and 80 inches above the walking surface can extend into the path of travel up to 12 inches. (CCR, Section 11B-307.3.)

A person using a wheelchair for mobility will require a clear floor space of 60 inches in diameter or a T-shaped space to turn around and maneuver their wheelchair in the voting area. (CCR, Sections 11B-304.3.1 and 11B-304.3.2.) The minimum clear floor or ground space required to accommodate a person using a wheelchair shall be 30 inches by 48 inches. (CCR, Section 11B-305.3.) See Figure 13.

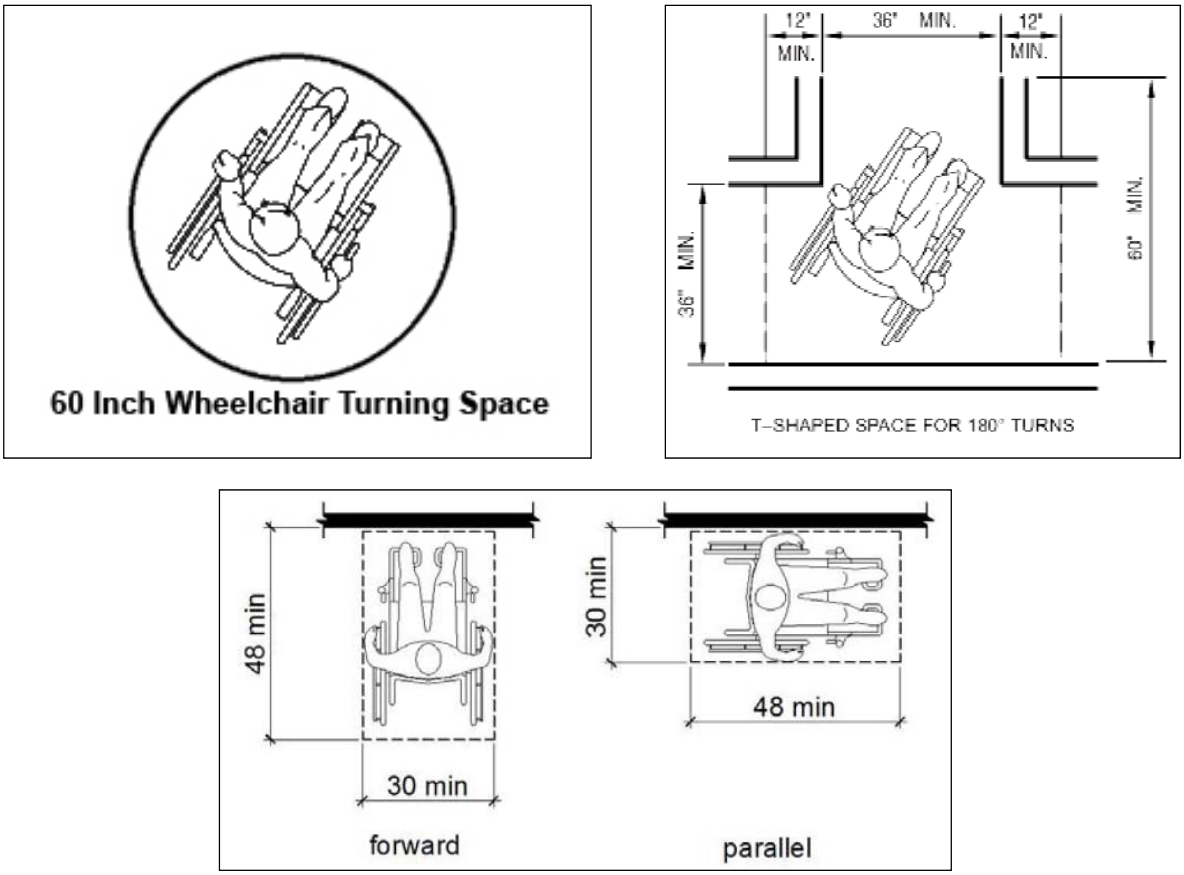

Figure 13. Diagrams showing the 60 inches turning space, the "T" shaped turning space, and the 30 inches by 48 inches clear floor space.

Accessible tables in the voting area shall be between 28 inches to 34 inches from the finish floor. (CCR, Section 11B-902.3.) Under each accessible table, there shall be a clear space at least 19 inches deep, 30 inches wide, (CCR, Section 11B-306.2.5.) and 27 inches from the finish floor as shown in Figure 14. (CCR, Section 11B-306.3.3 Exception 2.) The 30 inch by 48 inch clear floor space required for wheelchairs at tables may be combined with the knee space under tables and voting stations.

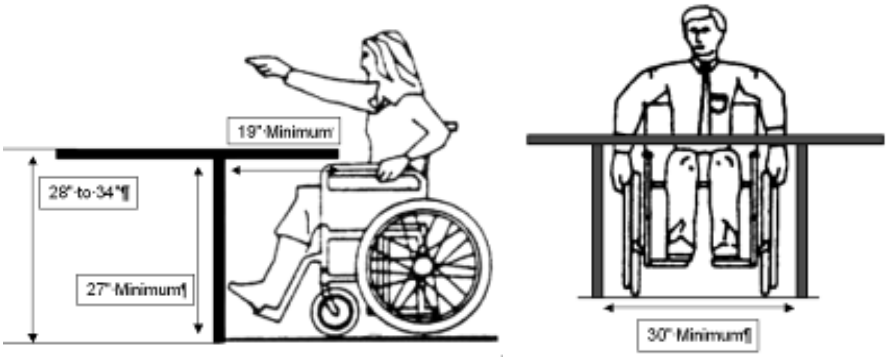

Figure 14. Individuals in wheelchairs showing unobstructed measurements for accessible tables.

Elderly voters and voters with disabilities shall be able to approach the voter sign-in or other writing tables from a forward or side/parallel position. Tables used as a base for voting equipment shall provide a forward or side approach as shown in Figure 15. The voting equipment shall be placed at a height where operable controls throughout their full range of movement are no higher than 48 inches above the floor for a front or side reach. (CCR, Sections 11B-308.2 and 11B-308.3.)

Providing both a forward and parallel approach to voting equipment, a sign-in station, or other accessible tables is not required by building codes or other accessibility standards. However, Title II of the Americans with Disabilities Act requires every county to make their program accessible to voters with disabilities. For this reason, the Secretary of State encourages counties to make both a forward and parallel approach available to voters with disabilities in order to provide a meaningful opportunity for voters with disabilities to vote independently and with privacy. (28 CFR 35.149-35.150.) See Figure 15.

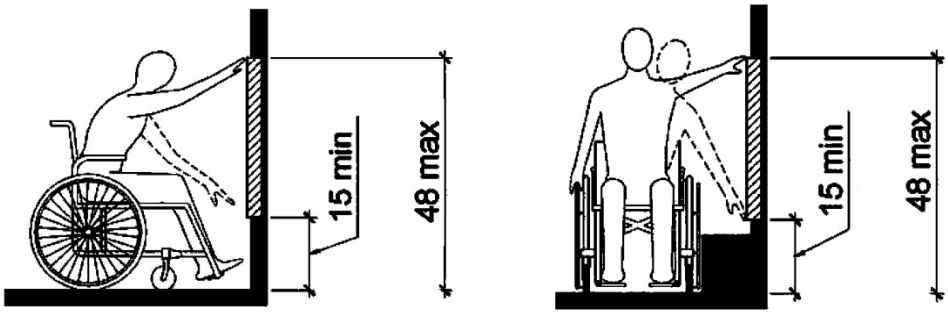

Figure 15. Individuals in wheelchairs showing unobstructed high and low, forward and side reach limit measurements.

Other requirements for the interior path of travel may include the slope, cross-slope, overhead clear space, protruding objects, changes in level, and stable, firm, and slip-resistant surfaces, or other path of travel features as explained in Section 2 Path of Travel. Additional ways of providing accommodation in the voting area may include assigning a poll worker the duty of providing way-finding throughout the day and during emergencies.

5. Signage
Sections 11B-216 and 11B-703

Signage is used extensively on Election Day to direct voters arriving at the polling place to the voting area. However, not all areas or features of a building open on Election Day are under the jurisdiction of county elections officials. For this reason, those areas of a facility used by county elections officials shall be clearly marked to provide accessibility for all voters. (CCR, Sections 11B-216.2 and 11B-216.3.)

When a voter arrives at the polling place, several signs may be necessary to show elderly voters and voters with disabilities where to vote. All directional entrance signs placed at arrival points to the polling place shall conform with this section. Additional directional signs shall be provided to guide voters toward and through the accessible path of travel to the voting area whenever that path diverges from the regular path of travel. (CCR, Sections 11B-216.6 and 11B-703.5.)

The standard symbol used to identify facilities and features that are accessible to elderly voters and persons with disabilities is the International Symbol of Accessibility (ISA). The ISA used by county elections officials consists of a white figure on a blue background. (CCR, Section 11B-703.7.2.1.) See Figure 16.

Figure 16. International Symbol of Accessibility (ISA).

Providing way-finding signage to the voting area is accomplished by using the ISA in conjunction with large bold arrows and/or other directional symbols. All accessible signage regardless of content shall have a non-glare finish. (CCR, Sections 11B-216.6 and 11B-703.5.1.) For signage that must be laminated to withstand exterior weather conditions, it is recommended that a matte or eggshell finish laminate be applied to reduce glare.

Accessible signs shall also have character and symbol colors that contrast with the background color. (Dark on a light background or light on a dark background.) (CCR, Sections 11B-703.5.1 and 11B-703.7.1.) See Figure 17.

Figure 17. Accessible sign showing light characters on a dark background.

All accessible building entrances shall be identified with the ISA. Entrances which are not accessible on Election Day shall have directional signage that indicates the route to the nearest accessible entrance. (CCR, Section 11B-216.6.) Directional signs shall have contrasting colors and non-glare finish (CCR, Sections 11B-216.6 and 11B-703.5.1.) Directional and informational signs do not require raised letters and Braille. See Figure 18.

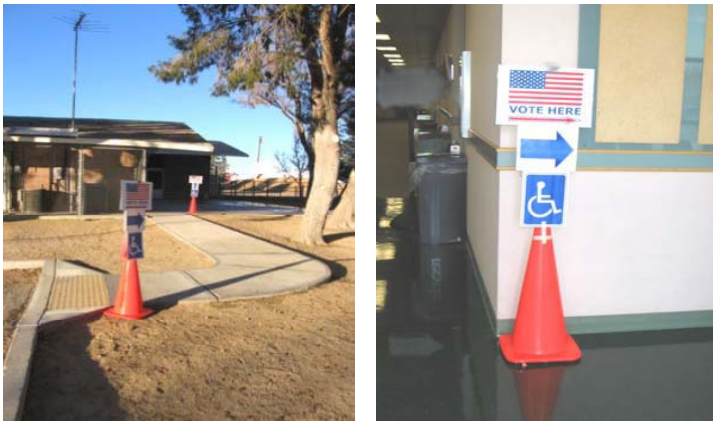

Figure 18. Accessible directional signage indicating the route to the accessible polling place entrance.

Permanent rooms and spaces identified with names or room numbers that are used by elections officials shall be identified with signs containing the corresponding names and numbers in raised letters/numerals and Braille. (CCR, Sections 11B-703 and 11B-703.2.) These signs shall be installed on the wall adjacent to the latch-side, or strike-side edge, of the door. If there is no wall space on the latch-side of the door (for example double doors) signs shall be placed on the nearest adjacent wall, preferably on the right side. (CCR, Sections 11B-703.4.2 and 11B-703.5.)

Tactile characters on signs shall be placed so the lowest part of any Braille cell is 48 inches or higher above the floor and the bottom of any tactile letter is no more than 60 inches above the floor measured from the baseline of raised characters. (CCR, Sections 11B-703.4.1 and 11B-703.4.2.) See Figure 19.

Figure 19. Mounting height for Braille and Raised Characters.

A voter shall be able to approach within 3 inches of a sign without encountering protruding objects, or standing/wheeling within the swing of a door. (CCR, Section 11B-703.4.2.)

Additional ways of accommodation provided in the voting area may include assigning a poll worker the duty of providing way-finding throughout the day and during emergencies.

6. Ramps, Curb-Ramps and Slopes
Sections 11B-405, 11B-406, and 11B-505

When slopes are encountered on the path of travel to a polling place, they fit into three categories:

1. When a slope measures 5 percent or less, it is not a ramp; it is merely a slope in the normal path of travel.
2. When a slope measures more than 5 percent, it is considered a ramp.
3. When a slope provides access across a curb, it is defined as a curb-ramp or curb-cut.

The maximum slope allowed for any ramp that provides access for elderly voters and voters with disabilities is 8.33 percent. (CCR, Section 11B-405.2.) The percent of slope is determined by dividing the number of inches of vertical rise (height) for each 12 inches of horizontal run (length). For example, a slope with 1 inch of vertical rise for every 12 inches of horizontal run equals the maximum slope of 8.33 percent (1⁄12 = 8.33 percent). (Similar to Section 2, Path of Travel, when ramps slope to the side, the maximum cross-slope allowable is 2 percent.) (CCR, Section 11B-405.3.)

Ramps

Ramps shall be a minimum of 48 inches wide with level landings at both the top and bottom of every ramp. (CCR, Sections 11B-405.5, 11B-405.7 and 11B-405.7.1 Exception.) Top landings shall be at least 60 inches wide and 60 inches long. Bottom landings shall be at least 72 inches long. (CCR, Sections 11B-405.7.2.1 and 11B-405.7.3.1.)

Another type of landing is called an "intermediate landing." When the sloped area of a ramp rises vertically to a height of 30 inches above the bottom landing, the ramp shall end or there shall be a break in the slope for a level intermediate landing. (CCR, Section 11B-405.6.) If a ramp changes direction at an intermediate landing, the intermediate landing shall be at least 60 inches wide by 72 inches long in the direction of downward travel from the upper ramp run. (CCR, Section 11B-405.7.4.) See Figure 20.

At bottom and intermediate landings, the landing width shall be at least as wide as the ramp. (CCR, Section 11B-405.7.2.)

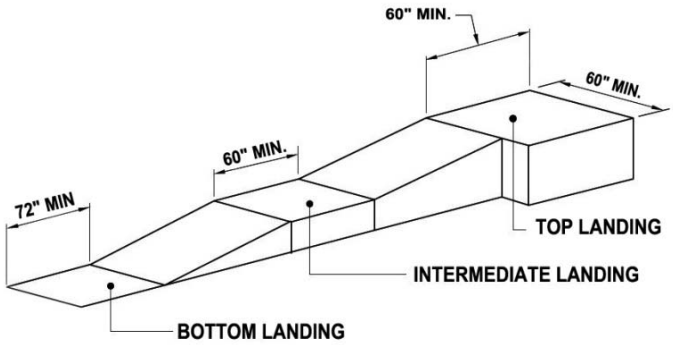

Figure 20. Ramps showing landings and a change of direction at intermediate landing.

If a ramp is not adjacent to a wall, edge protection shall be provided at least 2 inches high on both sides of the ramp to prevent injuries when using assistive devices. Edge protection on one side of the ramp is permitted when the other side adjoins a wall or other vertical surface. (CCR, Section 11B-405.9.) See Figure 21.

Figure 21. Accessible ramp with edge protection.

Handrails that provide continuous support are required on both sides of a ramp and shall continue at least 12 inches past the end of the ramp surface. (CCR, Sections 11B-505.2 and 11B-505.3.) The handrail extensions shall be rounded or return to the ground, a wall, or post as shown in Figure 21. By extending the handrail 12 inches past the slope of the ramp, voters with balance difficulties will be on a level surface when they release their grip on the handrail. (CCR, Section 11B-505.5.10.1.)

Circular handrails shall have a diameter of 1 ¼ inches to 2 inches. Non-circular handrails shall have a perimeter of 4 inches minimum and 6 ¼ inches maximum and a cross section dimension of 2 ¼ inches maximum. (CCR, Sections 11B-505.7.1 and 11B-505.7.2.) When handrails are mounted on a wall, the gap between the handrail and the wall shall be at least 1 ½ inches. (CCR, Section 11B-505.5.) Handrails shall be placed on both sides of the ramp. They shall be continuous the full length of the ramp and shall be mounted 34 to 38 inches above the ramp surface measured to the top of the handrails. (CCR, Sections 11B-505.2 and 11B-505.4.)

When a ramp has a change in direction, the inside rail shall be continuous from landing to landing as shown in Figure 22. (CCR, Sections 11B-505.2 and 11B-505.3.) At exterior doors, when the top landing and door landing overlap, a ramp does not require handrails if it is less than 6 inches high or 72 inches in length. (CCR, Sections 11B-505.2 Exception 3 and 11B-505.3.)

Figure 22. Ramp with continuous handrails.

Curb-Ramps

When a pedestrian path of travel crosses a curb, (a curb is considered a change in level as explained in Section 2, Path of Travel) a slope is required at the curb face or preferably cut into the curb as shown in Figure 23. (CCR, Section 11B-303.4.)

Curb-ramps are distinguished from ramps by a 12 inch wide grooved border cut into the walkway surface along the top and sides of the sloping surface. (CCR, Section 11B-406.5.11.) See Figure 23.

Unlike ramps, curb-ramps do not require handrails. Instead, the curb-ramp will have either wheel guides or side flares to prevent a voter with limited vision or a mobility disability from traveling off to the side of the curb-ramp slope. See Figure 23.

Figure 23. Curb ramp.

Similar to ramps, the maximum slope of a curb-ramp shall be 8.33 percent and the width shall be at least 48 inches. (CCR, Section 11B-406.5.2.) However, the landing dimensions for curb-ramps are different from ramps. The top landing of a curb-ramp shall be a minimum of 48 inches long to provide a resting place for someone who has just traveled up the curb ramp slope. To rest at the top of the slope also means the top landing shall be level. The bottom landing shall also be at least 48 inches long. (CCR, Section 11B-406.5.8.) The maximum slope allowed for the first 24 inches of the bottom landing shall be 5 percent or less. (CCR, Section 11B-406.5.9.)

It is important to remember that ramps and curb-ramps are a part of an accessible path of travel that includes the cross-slope, overhead clear space, protruding objects, changes in level, and stable, firm, and slip-resistant surfaces as explained in Section 2, Path of Travel.

7. Elevators and Lifts
Sections 11B-206.6 and 11B-407

Elevators

If an elevator is the only accessible path of travel to the voting room, it shall be accessible. Elevators that are adjacent to the voting area, but are not needed to enter the voting area, need not be surveyed. The call buttons used to summon each elevator shall be 48 inches maximum above the floor. (CCR, Sections 11B-407.2.1.1 and 11B-308.3.1.)

These buttons shall be raised above their surrounding surface as shown in Figure 24. (CCR, Section 11B-407.2.1.2.) Each button shall contain a white light that goes on when the button is activated and goes out when the elevator car arrives. (CCR, Section 11B-407.2.1.5.) A 30 inch by 48 inch unobstructed clear floor space shall be provided in front of the hall call buttons. (CCR, Sections 11B-407.2.1.3 and 11B-305.3.)

Objects placed adjacent to the call buttons shall not project more than 10 inches from the wall when a side approach is available. If there is only a front approach to the call buttons, no obstruction is allowed. (CCR, Sections 11B-308.3, 11B-308.2.)

Figure 24. Up and down elevator buttons.

After a call, when the elevator arrives at floor level, it shall provide an audible and visual signal. An audible signal is a tone that sounds once if the elevator is going up, and twice if the elevator is going down. Newer elevators may use computer synthesized voices to announce car arrival and direction. (CCR, Sections 11B-407.2.2.1 and 11B-407.2.2.3.)

Two visual signals (one for up, another for down) are also required to confirm the up or down direction on the elevator. The individual calling the elevator shall be able to see the up and down signals near the hall call buttons light up, whether the signals are mounted in the lobby or on the elevator car. The visual signals shall be at least 2½

inches high and 2½ inches wide. To be seen, the visual signals shall be installed at least 6 feet above the floor. (CCR, Sections 11B-407.2.2.1 and 11B-407.2.2.2.)

The elevator door shall open at least 36 inches for entry and exit. (CCR, Sections 11B-407.3.6 and 11B-407.4.1.) When the elevator door opens in the center, the inside of the elevator is required to be at least 80 inches wide and 51 inches deep (measured from the front wall to the back wall). A side-opening door allows a smaller car width of 68 inches as shown in Figure 25. In buildings with older elevators, the inside of the car can be as small as 48 inches wide by 54 inches deep. (CCR, Section 11B-407.4.1, Exception.) Elevators installed prior to January 1, 2014, may be as small as 48 inches wide by 48 inches deep.

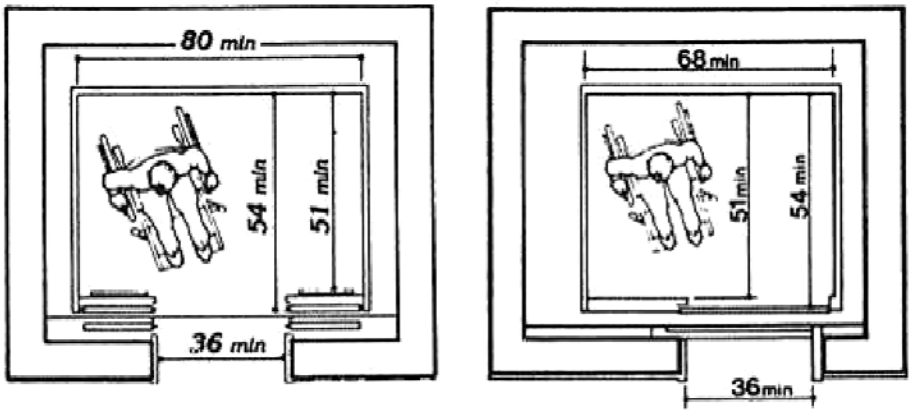

Minimum Dimensions of Elevator Cars

Figure 25. Persons using a wheelchair in an elevator with measurements for minimum dimensions of elevator cars.

At each elevator entrance, there is a gap between the floor outside the elevator and the elevator car. This gap shall be no larger than 1¼ inches wide. (CCR, Section 11B-407.4.3.)

The limited space serves to prevent a wheelchair wheel or a mobility assistance device from falling into the gap. It is recommended that the elevator stop at floor level, placing the floor of the elevator even with the lobby landing. However, it is permissible to have the elevator floor stop within ½ inch above or below the lobby floor.

On each side of the lobby elevator landing, the frame (doorjamb) shall have a sign installed indicating the floor designation in raised characters and Braille. The raised characters shall be at least 2 inches high with the Braille placed immediately below. (CCR, Section 11B-407.2.3.1.) See Figure 26.

Figure 26. Signs within the door jamb or frame of the elevator landing indicating the floor designation.

The main entry floor shall have a raised five-point star that is also 2 inches high placed on the left side of the raised character as shown in Figure 27. (CCR, Section 11B-407.4.7.1.2.)

Figure 27. A raised five-point star on the left side of the main floor number.

These signs shall be placed so the lowest part of any Braille cell is 48 inches or higher above the floor and the bottom of any tactile letter is no more than 60 inches above the floor measured from the baseline of raised characters. (CCR, Section 11B-703.4.1.)

When the elevator arrives and the door opens, it shall remain open at least 5 seconds to allow a person to enter through the doorway. (CCR, Section 11B-407.3.5.)

If the door starts to close while someone is in the doorway, a potential for injury is present. For this reason, all elevator doors required to be accessible on Election Day shall be equipped with an automatic door re-opening device that can detect the presence of a person in the doorway without contact. When a door re-opening device is activated, the door shall remain open a minimum of 20 seconds to allow anyone to move completely in or out of the elevator. (CCR, Sections 11B-407.3.3, 11B-407.3.3.2 and 11B-407.3.3.3.)

Once inside the elevator, a person may move directly in front of the car control buttons for an unobstructed front approach or a side approach. When a front approach is used, the center of the highest car control button shall be a maximum of 48 inches above the car floor. For a side approach, the center of the car control button shall be no higher than 54 inches. (CCR, Sections 11B-308 and 11B-407.4.6.1 Exception 2.)

Whether a voter will make a side approach or front approach depends on the interior dimensions of the elevator and the location of the elevator door.

Elevator control buttons shall also be illuminated. When a voter presses a button in the elevator, the traditional visual indicator, a light "inside" or encircling the button, illuminates to confirm the button is activated. The light goes out when the elevator completes each request. (CCR, Section 11B-407.4.6.2.3.)

A visual indicator is required to show the location of the elevator when it stops at or passes a floor level. This indicator shall be placed above the control panel or above the door. (CCR, Section 11B-407.4.8.1.2.) The numbers used to show the floor location shall be at least ½ inch high. (CCR, Section 11B-407.4.8.1.1.)

As the car passes or stops at a floor, the corresponding floor number lights up and an audible signal sounds. The audible signal is a synthesized voice saying "going up," "going down," or the floor number. (CCR, Section 11B-407.4.8.2.1.) Existing elevators having a tone that sounds once if the elevator is going up, and twice if the elevator is going down also comply with these guidelines.

Raised characters required on the left of each control button provide visual and tactile identification. (CCR, Sections 11B-407.4.7.1.2 and 11B-703.2.5.) The minimum 5/8 inch high characters provide a visual button identification through a contrasting white on a black background. The tactile identification from the raised characters is accompanied by corresponding Braille placed immediately below the raised characters. See Figure 28.

The additional symbol of a raised star is required on the left side of the raised character and Braille identifying the main floor control button. (CCR, Section 11B-407.4.7.1.3.)

Figure 28. Elevator buttons with five-point star, Braille, and raised characters.

Larger elevators may have more than one set of controls. In those cases, only one set of controls is required to comply. (CCR, Section 11B-407.4.7 Exception.)

Emergency control buttons shall have their centerlines 35 inches minimum above the finish floor. (CCR, Section 11B-407.4.6.4.1.)

Emergency two-way communication within the elevator shall be identified with the proper raised characters and Braille as required for control buttons. Two-way communication systems shall provide both audible and visual signals. (CCR, Sections 11B-407.4.7.1.3 and 11B-708.2.) Audible and visual signals allow voters with disabilities to summon rescue personnel without relying on voice communication. If a handset is provided, the cord shall be at least 29 inches long. (CCR, Section 11B-708.3.) When the emergency system is behind a closed door, the door has an accessible lever style hardware that does not require tight grasping, pinching or twisting of the wrist. (CCR, Section 11B-407.4.9.)

In every elevator, a smooth handrail is required on one wall of the car. The handrail shall be positioned 31 inches to 33 inches above the elevator floor when measured to the top of the handrail. Handrails shall have a gap of at least 1 ½ inches between the handrail and the wall. (CCR, Section 11B-407.4.10.)

Lifts

Wheelchair lifts may be provided between levels instead of passenger elevators. Lifts typically provide access where existing limitations prevent the use of a ramp or an elevator. If a lift is provided, it shall allow unassisted entry, operation and exit. (CCR, Section 11B-410.1.)

For unassisted entry and exit, lift doors shall have at least 32 inches clear width for a front approach or 42 inch clear width for a side approach. (CCR, Section 11B-410.1.)

For unassisted operation, voters shall be able to activate the lift controls with one hand without tight grasping, pinching, or twisting of the wrist. (CCR, Sections 11B-410.5 and 11B-309.4.)

The top and bottom landing areas where voters enter or exit the lift shall be a minimum size of 60 inches by 60 inches. (CCR, Section 11B-410.7.) Lifts installed prior to January 1, 2014, may have smaller landing dimensions if it is determined that a person using a 30 inch by 48 inch wheelchair can enter and operate the lift safely. See Figure 29.

To ensure continued operation in case of primary power loss, platform (wheelchair) lifts shall be provided with standby power or with self-rechargeable battery power that provides sufficient power to operate all platform lift functions for a minimum of five upward and downward trips. (CCR, Section 11B-207.2.)

Figure 29. Wheelchair lift.

A simple way to modify protruding objects, such as garbage cans or plants, in front of elevator door/lift controls or buttons is to relocate these objects.

8. Restrooms
Sections 11B-603 and 11B-213

Not all restrooms or features of a building are open on Election Day. However, if there is a restroom available to voters on Election Day, the restroom shall be accessible.

There are two types of restrooms: single accommodation and multiple accommodation. Single accommodation restrooms are designed for use by one person at a time behind a door. Multiple accommodation restrooms allow more than one person at a time to enter and exit the restroom.

When restrooms are available to voters on Election Day, they shall be on an accessible path of travel. (CCR, Section 11B-403.)

There are two sets of restroom signs required at the entrance of every restroom. The first set of signs, located on the latch side, or strike side edge of the door, shall be placed so the lowest part of any Braille cell is 48 inches or higher above the floor and the bottom of any tactile letter is no more than 60 inches above the floor measured from the baseline of raised characters. (CCR, Sections 11B-703.4.1 and 11B-703.4.2.) These signs, in contrasting colors, have an ISA, raised letters and Braille, and an optional pictogram to indicate whether the restroom is a Men's, Women's or Unisex, accessible restroom. (CCR, Sections 11B-703.5.1, 11B-213.2 and 11B-703.7.2.6.) See Figure 30.

Figure 30. Restroom raised letter and Braille signs.

The second set of signs are symbols for Men's, Women's, and Unisex restrooms. The Men's restroom sign is identified by an equilateral triangle with edges 12 inches long and the apex pointing upward. The Women's restroom sign is a circle 12 inches in diameter. The Unisex sign is a circle 12 inches in diameter with a triangle placed over the circle within the 12 inch diameter. These geometric signs shall be mounted at 58 inches minimum and 60 inches maximum above the floor or ground surface measured from the centerline of the sign. The color shall contrast distinctly from the color of the background. (CCR, Section 11B-703.7.2.6.) See Figure 31.

Figure 31. Geometric signs for Men, Women and Unisex restrooms.

Restroom entrances shall comply with the requirements in Section 3 Doors, Hallways and Entrances. (CCR, Sections 11B-206.4 and 11B-404.)

Inside the restroom, accessible fixtures such as paper towel dispensers, soap dispensers, or electronic hand dryers shall be on an accessible path of travel. (CCR, Sections 11B-213.2 and 11B-206.2.4.) The minimum width of the restroom accessible path of travel shall be 36 inches, and may reduce in width to 32 inches for a length not to exceed 24 inches. (CCR, Section 11B-403.5.1, Exception 1.)

An unobstructed turning space 27 inches high and at least 60 inches in diameter is required inside the restroom for voters who use wheelchairs. No door may swing into this space more than 12 inches except the door to the accessible toilet compartment. (CCR, Section 11B-213.2.) See Figure 32.

Figure 32. The inside of a restroom showing floor space measurements.

Clear spaces 30 inches by 48 inches are required in front of sinks, dispensers, mirrors and other fixtures with controls. (CCR, Section 11B-309.2.) Doors shall not swing into the clear spaces required in front of these items. (CCR, Section 11B-603.2.) The accessible path of travel, the 60 inch diameter turning space, and the clear floor spaces in front of sinks, dispensers, mirrors and other fixtures with controls may overlap. (CCR, Sections 11B-603.2 and 11B-213.2.)

Accessible sinks have several clear space requirements illustrated by Figure 33 and described below.

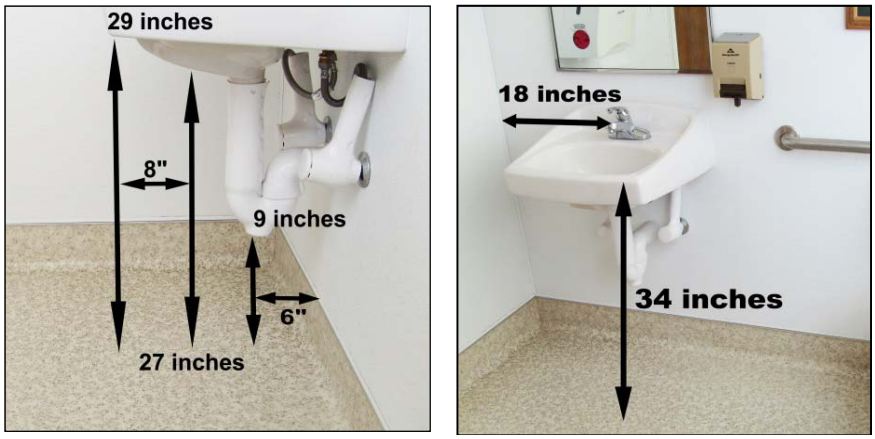

Figure 33. Sink knee clearances and accessible space requirements.

The clear floor spaces are required at sinks and shall adjoin or overlap an accessible path of travel in the restroom. The clear floor space may extend up to 19 inches into the knee space underneath the sink. (CCR, Sections 11B-306.2.3 Exception 1 and 11B-606.2.) This clear floor space allows a person using a wheelchair for mobility to move close enough to use the faucet controls, dispensers, or mirror.

When sinks are located next to a sidewall or partition, a minimum 18 inches of clear space on the counter (measured from the wall to the centerline of the faucet) is required for arm movement. (CCR, Section 11B-606.6.)

The rim or counter edge of the accessible sink shall be mounted a maximum of 34 inches from the finish floor. (CCR, Section 11B-606.3.)

The vertical clearance under the counter at the front edge of the sink shall be at least 29 inches above the floor. Moving horizontally 8 inches underneath the sink, the measurement is reduced to 27 inches above the floor. The next measurement is clear floor space measured at a point 6 inches forward from the back wall and shall be at least 9 inches high. Toe clear space shall be free of any type of obstructions, including hot water heaters, garbage cans, etc. These measurements are illustrated in Figure 33. (CCR, Section 11B-306.3.3 Exception 1.)

Faucets and other operating mechanisms shall be operable with one hand and not require tight grasping, pinching or twisting of the wrist. The maximum effort allowed for activating faucet controls is 5 pounds of force. When push-type or electronically controlled faucets are activated, the water shall remain on for at least 10 seconds. (CCR, Sections 11B-309 and 11B-606.4.)

To avoid injury, water pipes and drainpipes under accessible sinks shall be insulated or arranged to prevent contact. Sharp or abrasive surfaces under sinks shall not be allowed. (CCR, Section 11B-606.5.)

At least one of each type of restroom dispenser or other equipment provided for public use shall be located on an accessible path of travel. At least one of each type of towel holder, sanitary napkin dispenser, waste receptacle, or other dispenser shall be installed with operable controls a maximum of 40 inches above the floor. For operable controls, the movement of the control from beginning to end shall be at or below the 40 inch maximum height. (CCR, Section 11B-603.5.)

Mirrors above sinks or countertops shall be mounted with the bottom edge of the reflecting surface no higher than 40 inches from the floor. (CCR, Section 11B-603.3.)

The toilet paper dispenser shall be placed between 7 and 9 inches in front of the toilet when measured to the centerline of the dispenser. The outlet of the dispenser shall be 19 inches minimum above the floor and placed so the outlet is completely below the grab bar. No part of the dispenser shall be located behind the grab bar. Dispensers that control delivery or that do not permit continuous paper flow shall not be used. Toilet paper dispensers shall be installed below the side grab bar. (CCR, Section 11B-604.7.)

Toilet paper dispensers installed prior to January 1, 2014, may be placed within 12 inches of the front edge of the toilet measured to the centerline of the dispenser.

A multiple accommodation restroom provides one or more toilet stalls. At least one of these toilet stalls shall be accessible. (CCR, Section 11B-213.3.1.)

The minimum width for an accessible toilet stall is 60 inches. (CCR, Section 11B-604.3.1.)

When the toilet stall has an end-opening door that faces the toilet, a minimum 60 inches wide by 48 inches deep clear floor space shall be provided in front of the toilet. (CCR, Section 11B-604.8.1.1.3.) If the stall has a side-opening door, a minimum 60 inches wide by 60 inches deep clear floor space shall be provided in front of the toilet. (CCR, Section 11B-604.8.1.1.2.)

When a stall door is at the end of the stall, facing the toilet, the minimum clear width of the stall door opening shall be 32 inches when measured with the door open to 90 degrees. When a stall door is at the end of the stall, its minimum width shall be 34 inches when measured with the door open to 90 degrees. Stall doors shall be self-closing. (CCR Section 11B-604.8.1.2.)

The latch hardware on the stall door shall be a flip-over style, sliding or similar hardware that does not require the user to grasp, pinch or twist their wrist. Accessible handles shall be placed near the latch on both the inside and outside of the stall door. (CCR, Section 11B-604.8.1.2, Exception.) See Figure 34.

Figure 34. Restroom door with an accessible handle and flip over style hardware.

The space immediately in front of the stall shall not be less than 48 inches deep measured at a right angle to the closed stall door. (CCR, Section 11B-604.8.1.2.) Except for door-opening widths and door swings, a clear path of travel not less than 44 inches wide shall be provided to accessible toilet stalls. (CCR, Section 11B-604.8.2.2.). See Figure 35.

Figure 35. Restroom clear floor space on the path of travel to the toilet stall.

Inside the stall, clear floor space is required in front of and around the toilet. A minimum 60 inches wide by 48 inches deep clear floor space shall be provided in front of the toilet. No obstruction shall be permitted in the clear floor space between the edge of the toilet and the farthest wall or partition. (CCR, Sections 11B-604.3.1 and

11B-604.3.2.) The centerline of the toilet shall be 17 inches minimum to 18 inches maximum from the nearest sidewall or partition. (CCR, Section 11B-604.2.)
The height of an accessible toilet seat shall be between 17 inches and 19 inches measured from the floor to the top of the toilet seat. (CCR, Section 11B-604.4.) See Figure 36.

The flush control shall be mounted no more than 44 inches above the floor and located on the open floor side of the toilet. The flush control shall require no more than 5 pounds of force to operate. (CCR, Section 11B-604.6.)

Grab bars in the accessible toilet stall shall be provided on the sidewall closest to the toilet and on the rear wall behind the toilet. (CCR, Section 11B-604.5.)

Grab bars with a circular cross section shall have an outside diameter of 1 ¼ inches to 2 inches. Grab bars with non-circular cross sections shall have a maximum cross section dimension of 2 inches and a perimeter dimension of 4 inches minimum and 4.8 inches maximum. (CCR, Section 11B-609.2.) Grab bars shall be mounted with a space of 1 ½ inches between the grab bar and the wall. (CCR, Section 11B-609.3.)
Grab bars shall be securely attached and centered 33 inches minimum and 36 inches maximum above and parallel to the floor when measured to the top of the gripping surface. (CCR, Section 11B-609.4.)

Side grab bars shall be a minimum of 42 inches long, extend 54 inches minimum from the rear wall, and continue past the front edge of the toilet at least 24 inches. (CCR, Section 11B-604.5.1.) Rear grab bars shall be a minimum of 36 inches long, extend from the centerline of the toilet 12 inches minimum toward the narrow side, and 24 inches minimum toward the wide side. (CCR, Section 11B-604.5.2.) See Figure 36.

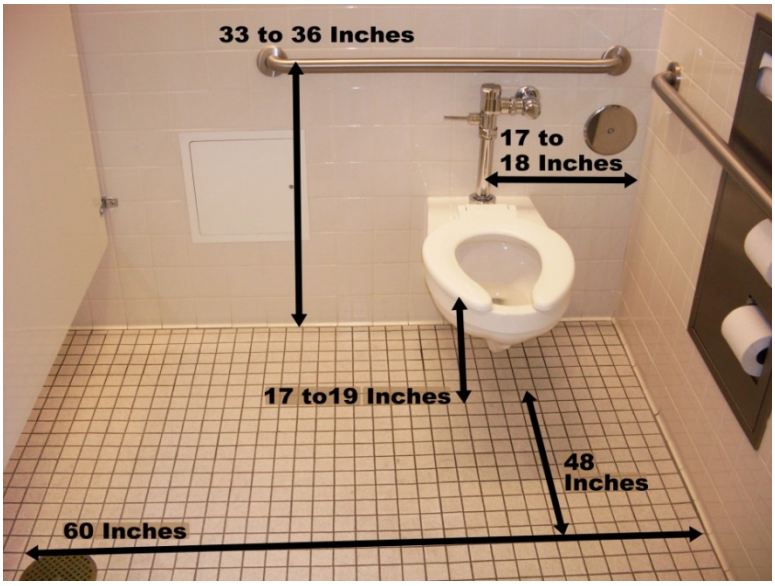

Figure 36. Clear floor space, toilet and grab bar measurements inside a restroom stall.

Single accommodation restrooms (the same configuration as Unisex restrooms) provide at least one toilet and one sink. The room may or may not have a partition between the toilet and sink. See Figure 36.

There shall be a clear floor space of at least 60 inches in diameter, or a T-shaped turning space. A door cannot encroach into this turning space by more than 12 inches. (CCR Section 11B-603.2.3.) Grab bars shall be provided on the sidewall closest to the toilet and on the rear wall behind the toilet in the same manner as required for toilet stalls. (CCR, Section 11B-604.8.1.5.)

The centerline of the toilet shall be 17 to 18 inches from the nearest sidewall or partition. (CCR, Section 11B-604.2.) In front of the toilet, there shall be a rectangle clear floor space a minimum of 60 inches wide by 48 inches deep. (CCR, Section 11B-604.3.1.)

In single accommodation restrooms constructed prior to January 1, 2014, with a fixture next to the toilet, the wide side of the toilet can be as narrow as 28 inches between the toilet and a fixture. If no fixture is adjacent to the toilet the clear space on the wide side of the toilet can be as narrow as 32 inches.